MULTIBRACKETS

Technical Summary

M Pro Series - Wheelbase Indoor Totem 55"

EAN: 7350105214790

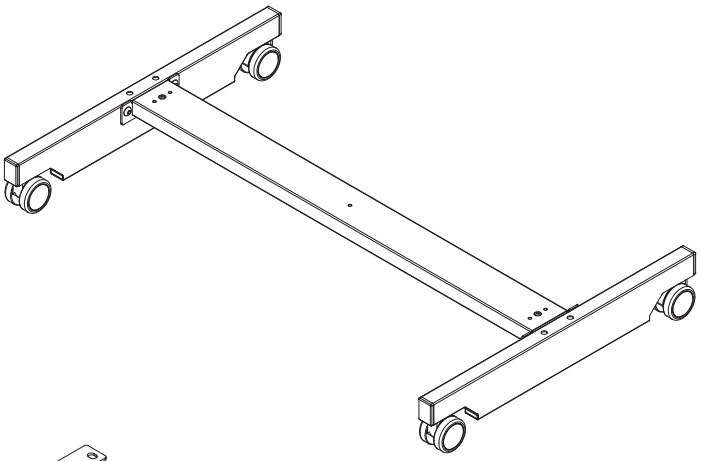

PRODUCT DIMENSION

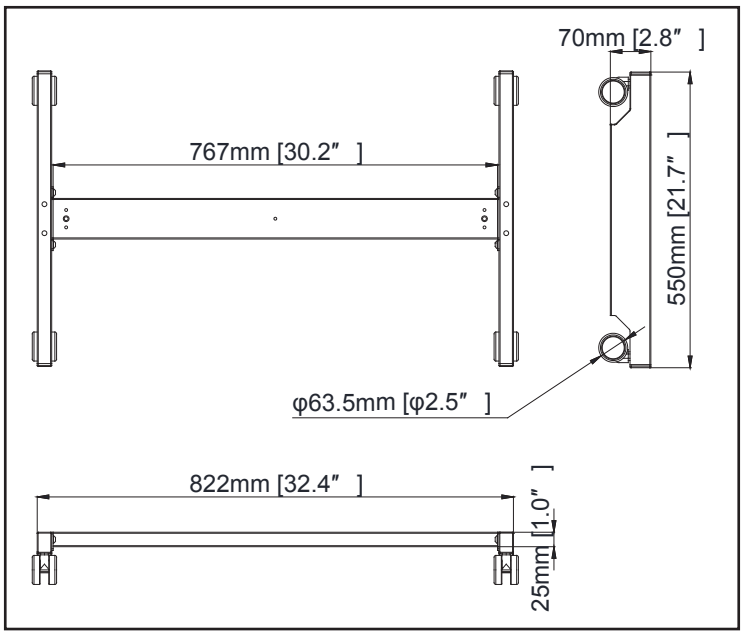

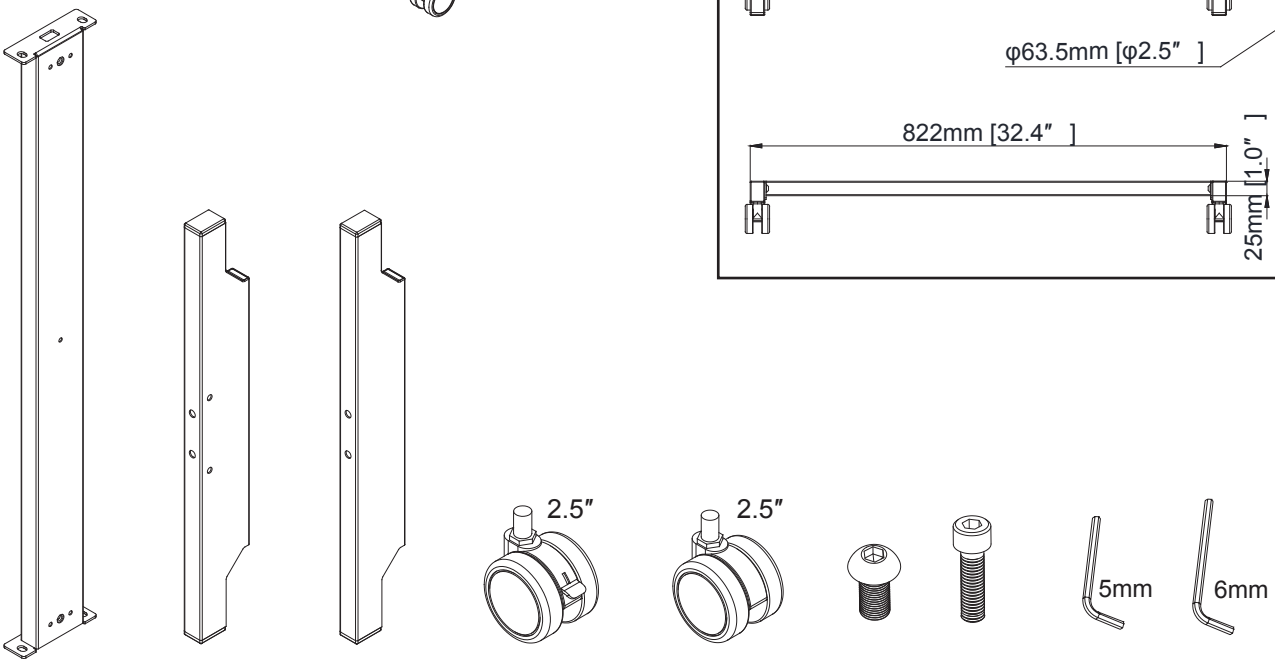

A B C D E F G H I

COMPONENT CHECKLIST

Item	Name	QTY
A	Square Tube	1
B	Left Foot Tube	1
C	Right Foot Tube	1
D	63.5mm (2.5”) Lockable Castors	2
E	63.5mm (2.5”) Castors	2
F	M8 x 12mm Screw	7
G	M8 x 16mm Screw	4
H	5mm Allen Key	1
I	6mm Allen Key	1

M Pro Series - Wheelbase Indoor Totem 55"

Scan for info!

INSTALLATION INSTRUCTION

1

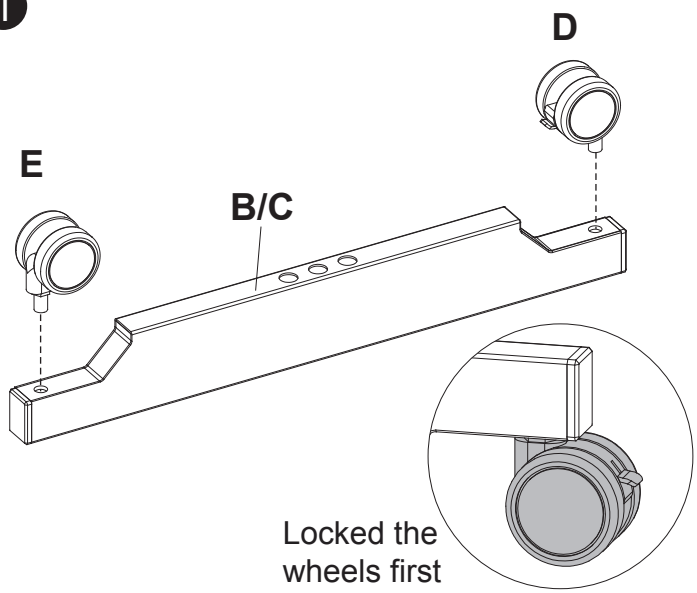

2

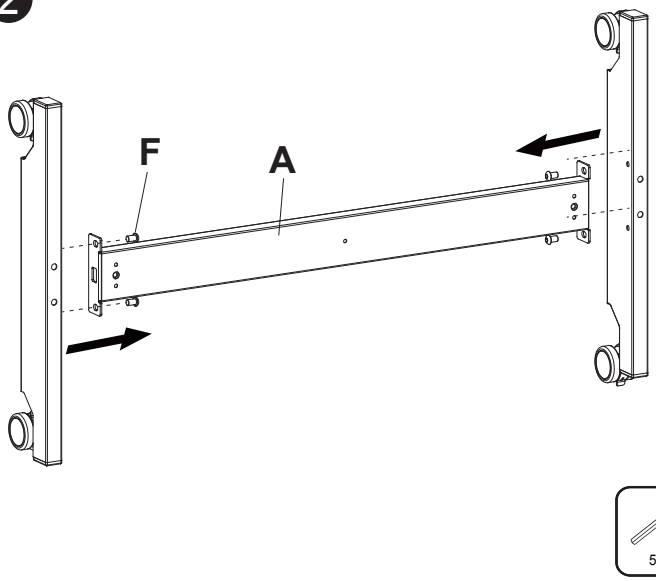

3

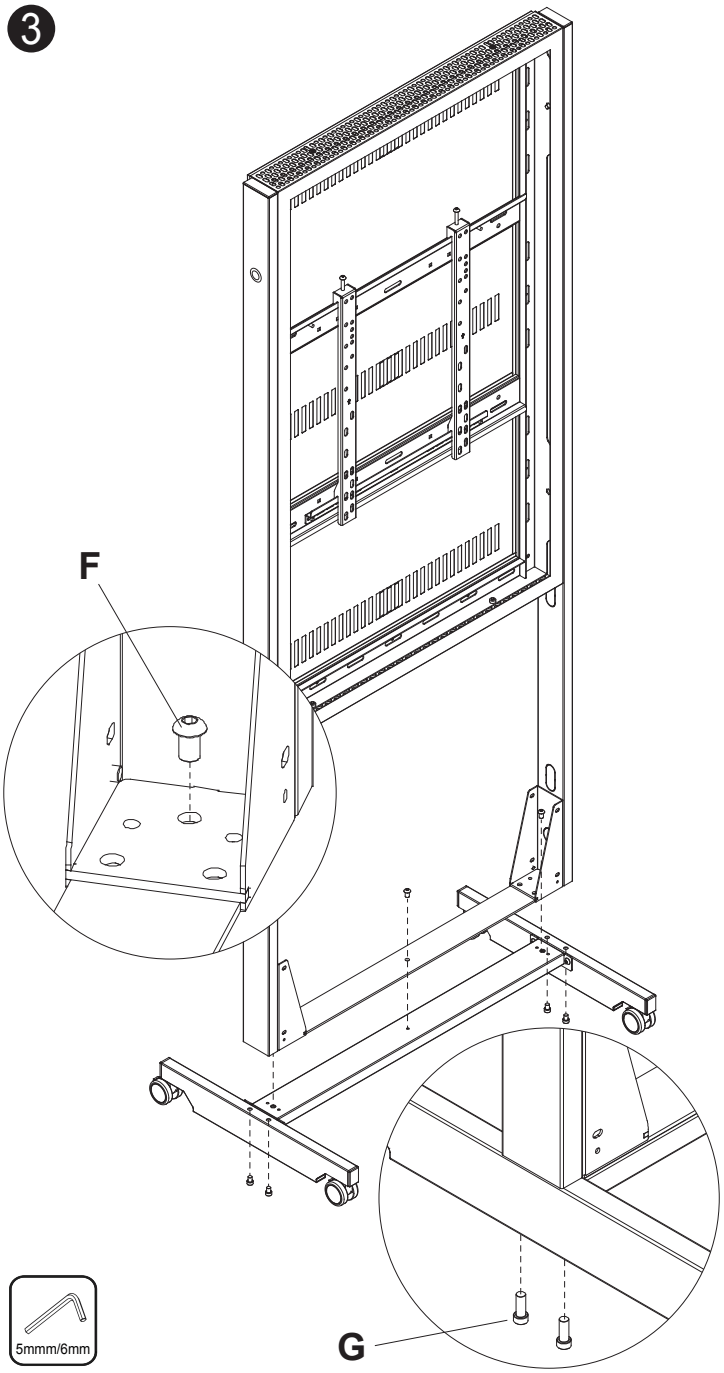

4

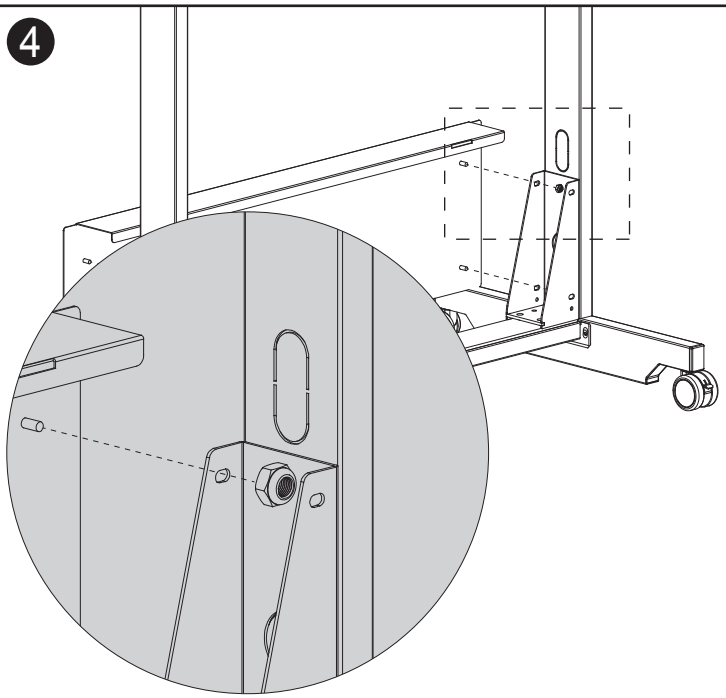

5

