le Screen®
BY MULTIBRACKETS

Re-Tensioning the Screen

1

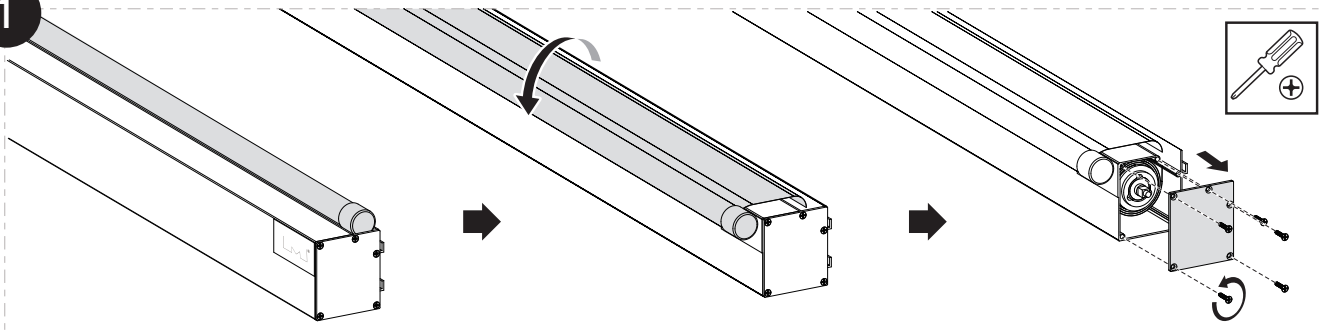

Position the projector screen as shown.

Pull the screen out to the left as shown.

Remove the end cap.

2

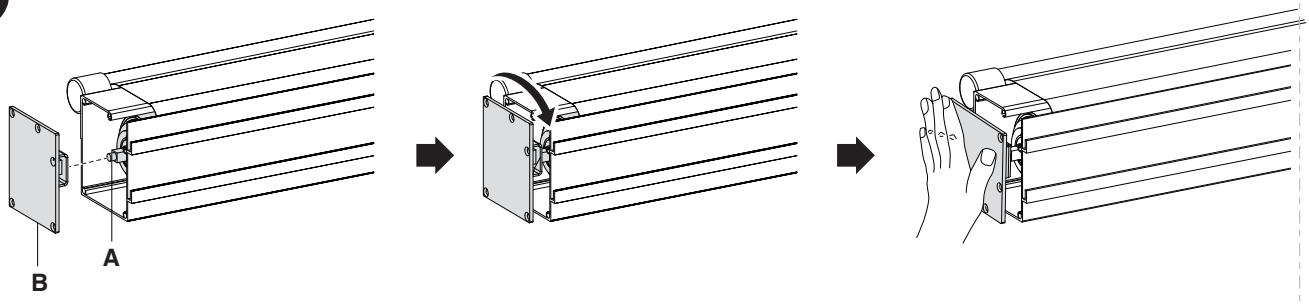

Align the square rod (**A**) with the hole in the end cap (**B**) and insert.

To release the spring tension, turn 1/4 turn in the direction shown and the spring will automatically turn in the opposite direction.

Warning: Hold the end cap firmly with your palm during the tension release process to prevent injury.

3

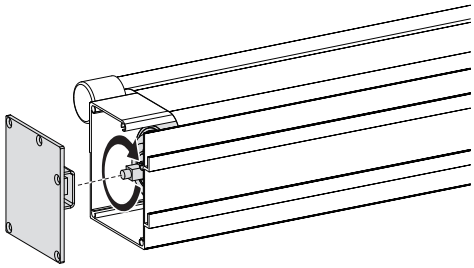

Once again, align the square rod (**A**) with the hole in the end cap (**B**) and insert. Turn the end cap about 12 turns in the direction shown. Remove end cap (**B**) until the spring stops returning.
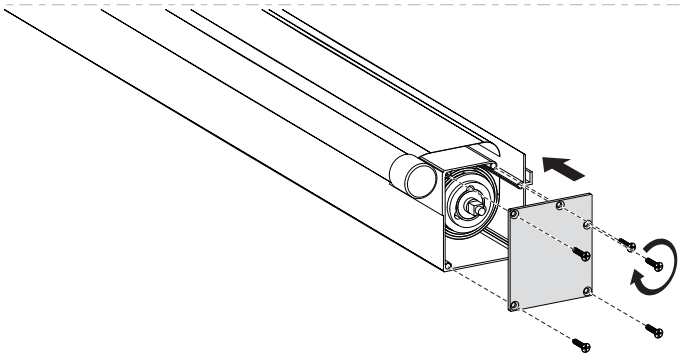
4