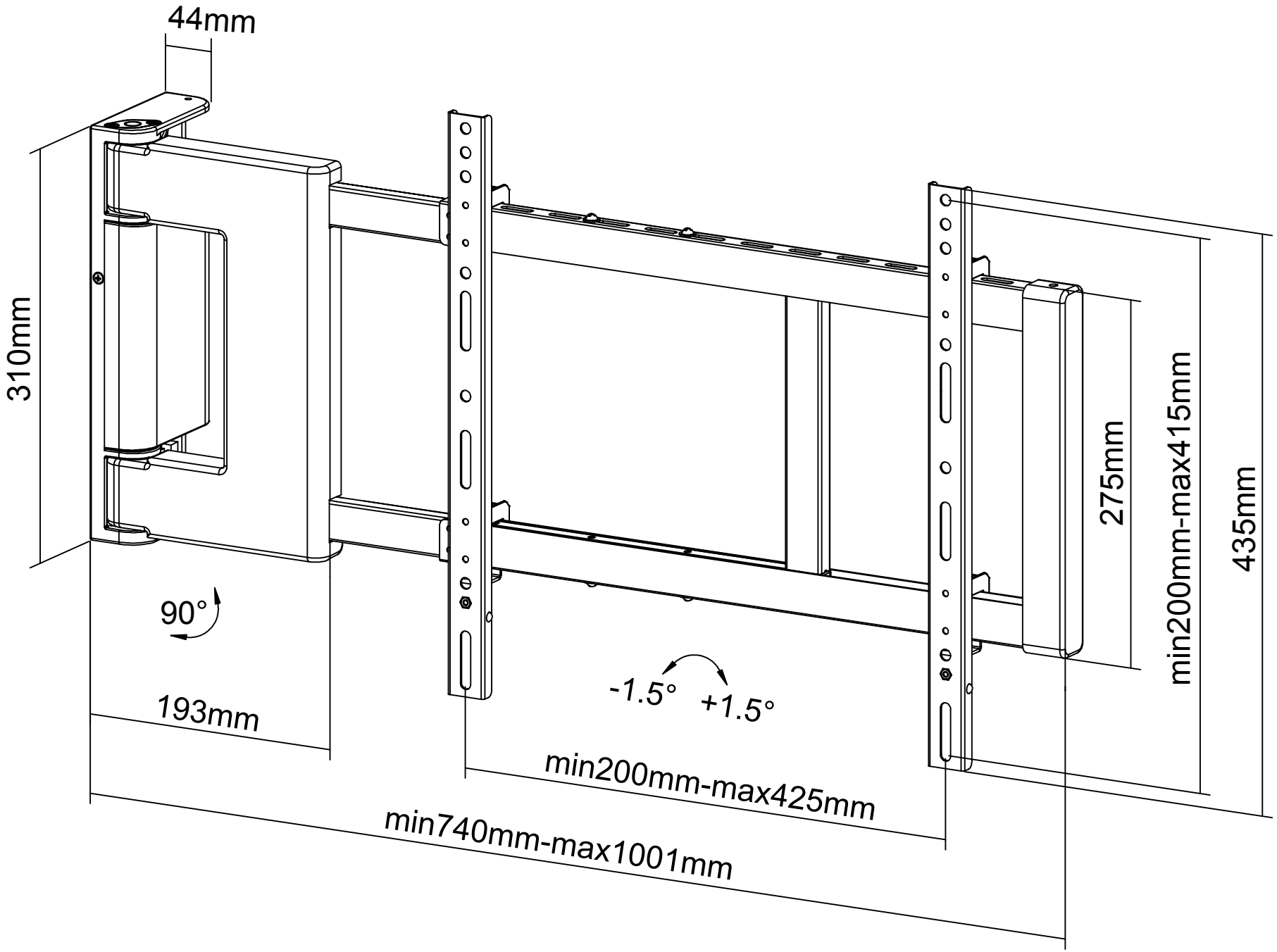
44mm
310mm
90°
193mm
-1.5°
+1.5°
min200mm-max425mm
min740mm-max1001mm
275mm
min200mm-max415mm
435mm