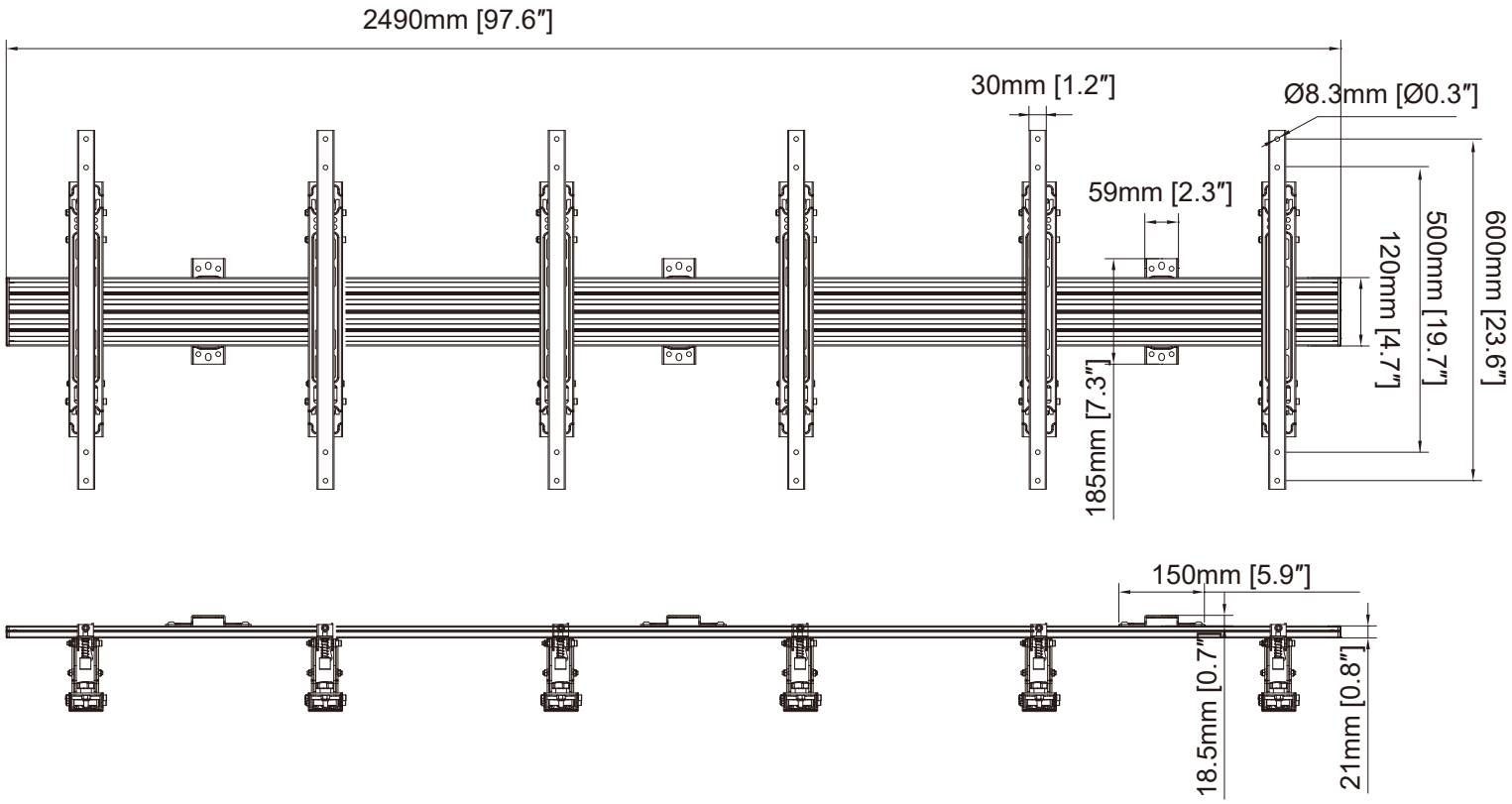

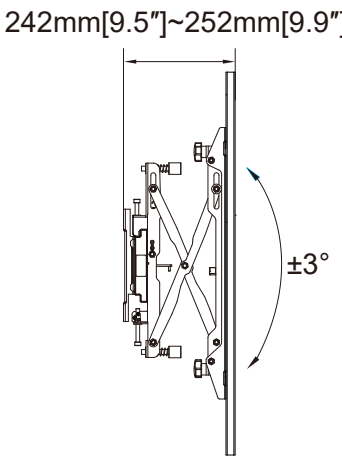

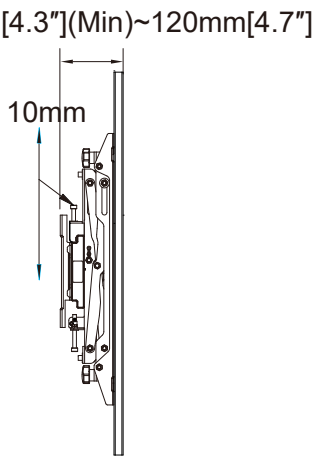

Multibrackets Europe AB

Sveavägen 140, 113 50 Stockholm, Sweden