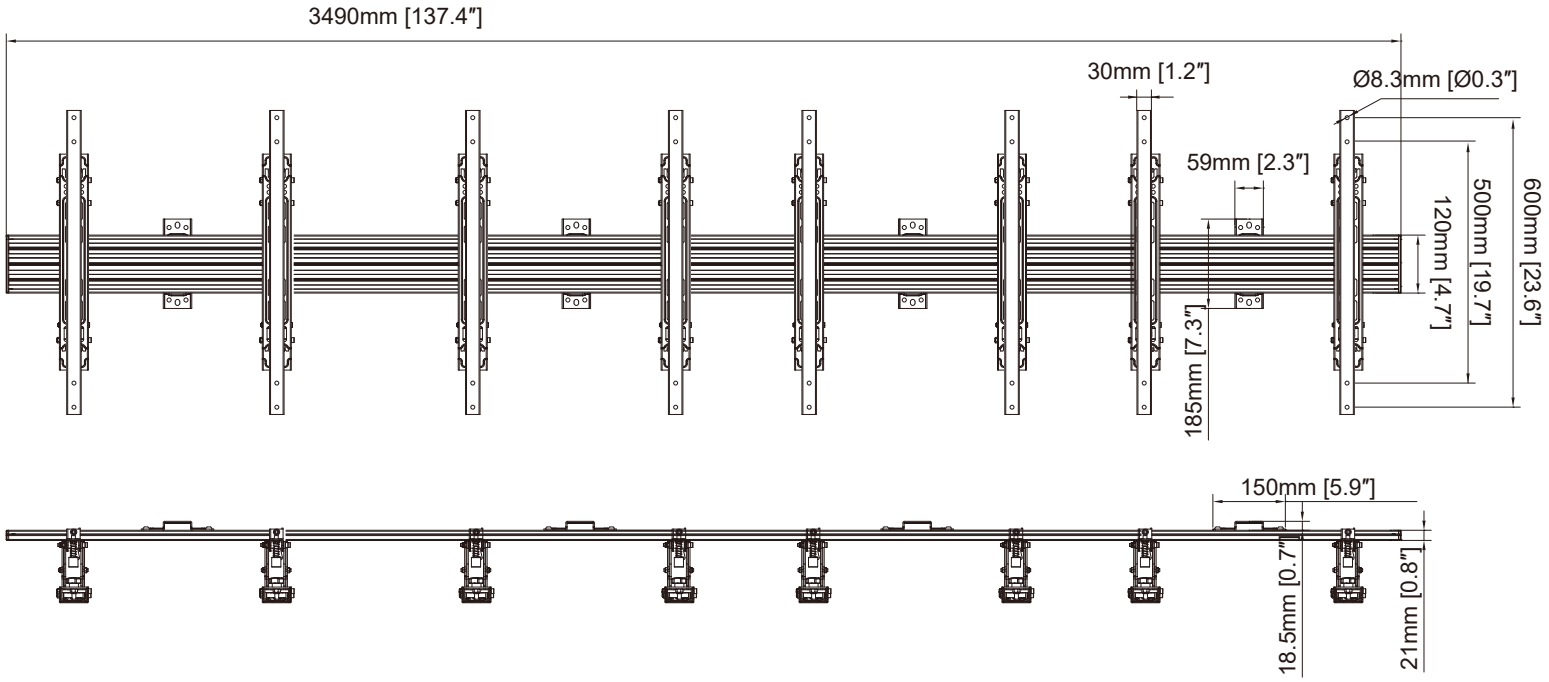

242mm[9.5″]~252mm[9.9″](Max)

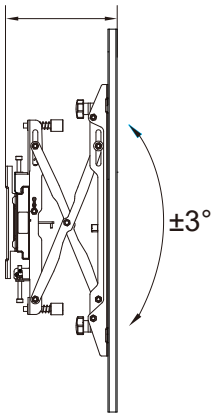

110mm[4.3″](Min)~120mm[4.7″]

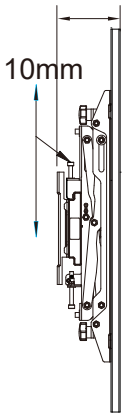

Multibrackets Europe AB

Sveavägen 140, 113 50 Stockholm, Sweden