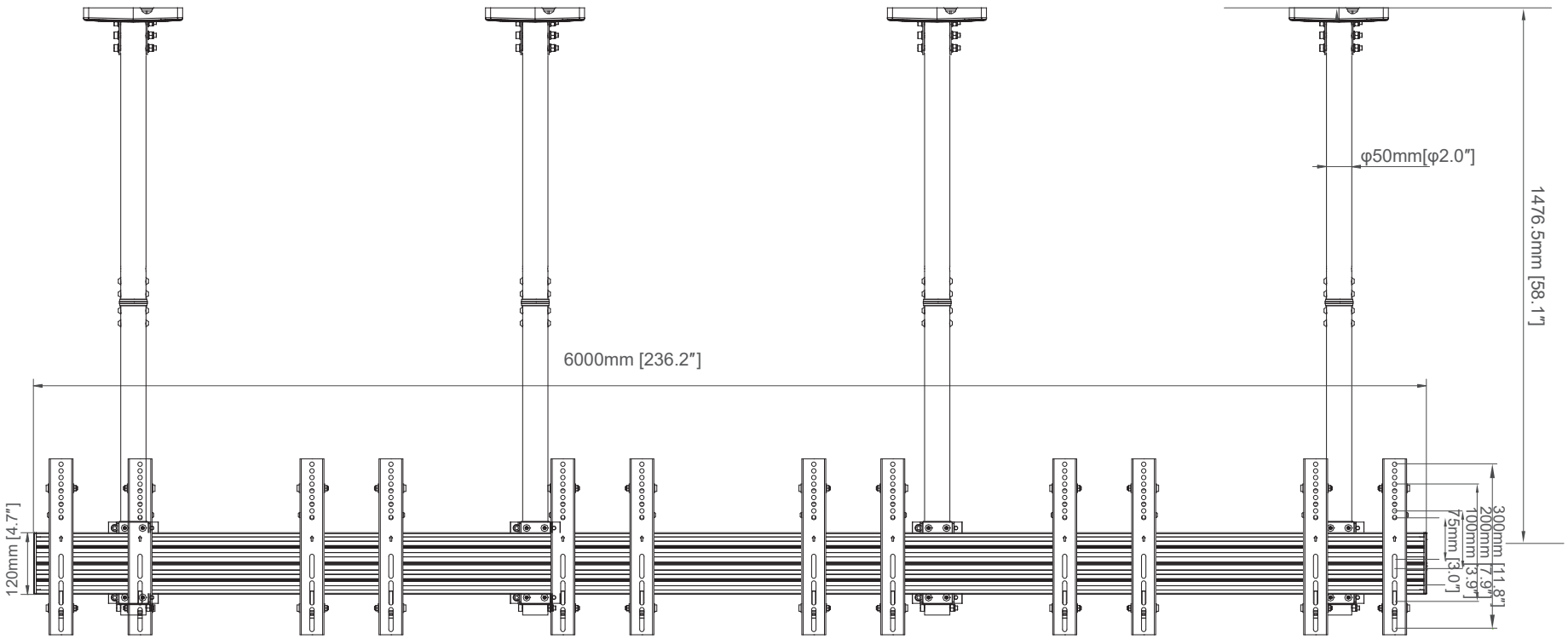

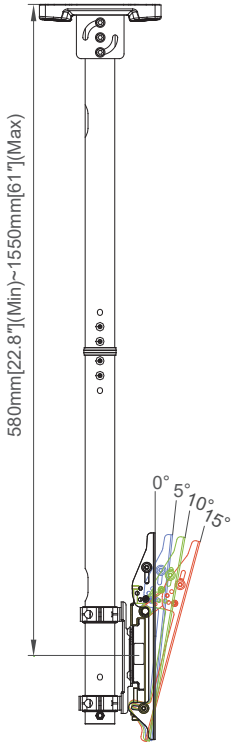

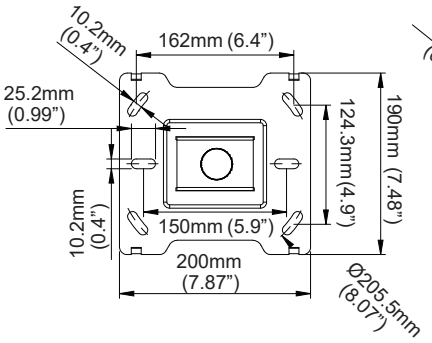

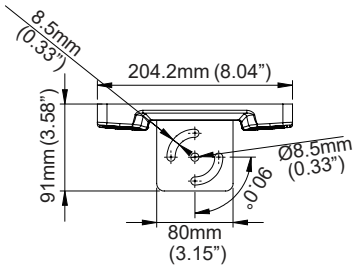

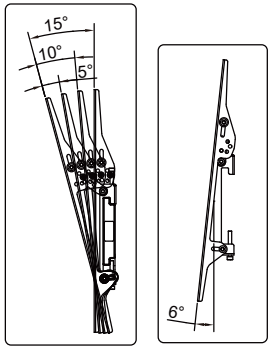

Multibrackets Europe AB
Sveavägen 140, 113 50 Stockholm, Sweden