M TOTEM FOUNDATION BLOCK

DIMENSIONS AND INTERNAL CABLE ROUTING

01 DIMENSIONED VIEWS

Orthographic views | Scale 1:10

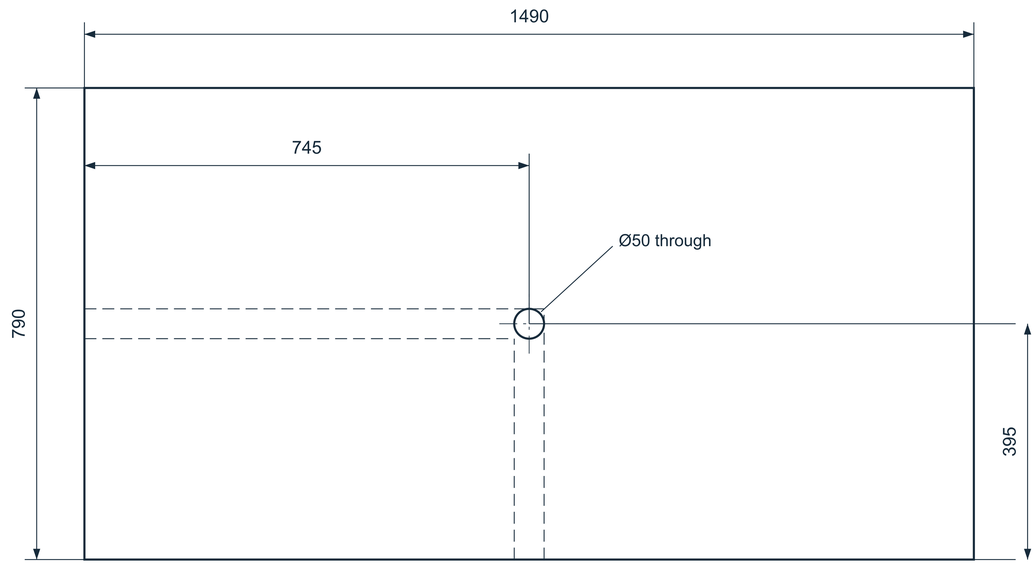

TOP VIEW

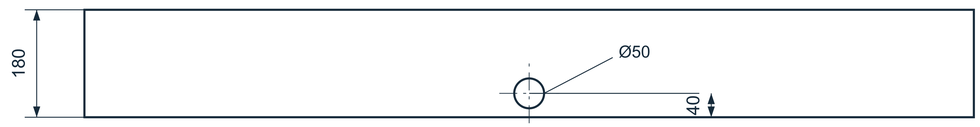

LONG SIDE

Hole centred along length: 745

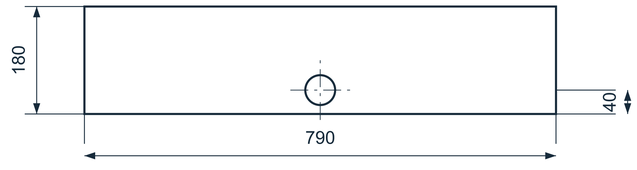

SHORT END

Ø50 / centred: 395

02 INTERNAL CABLE CHANNELS

Transparent isometric view | Not to scale

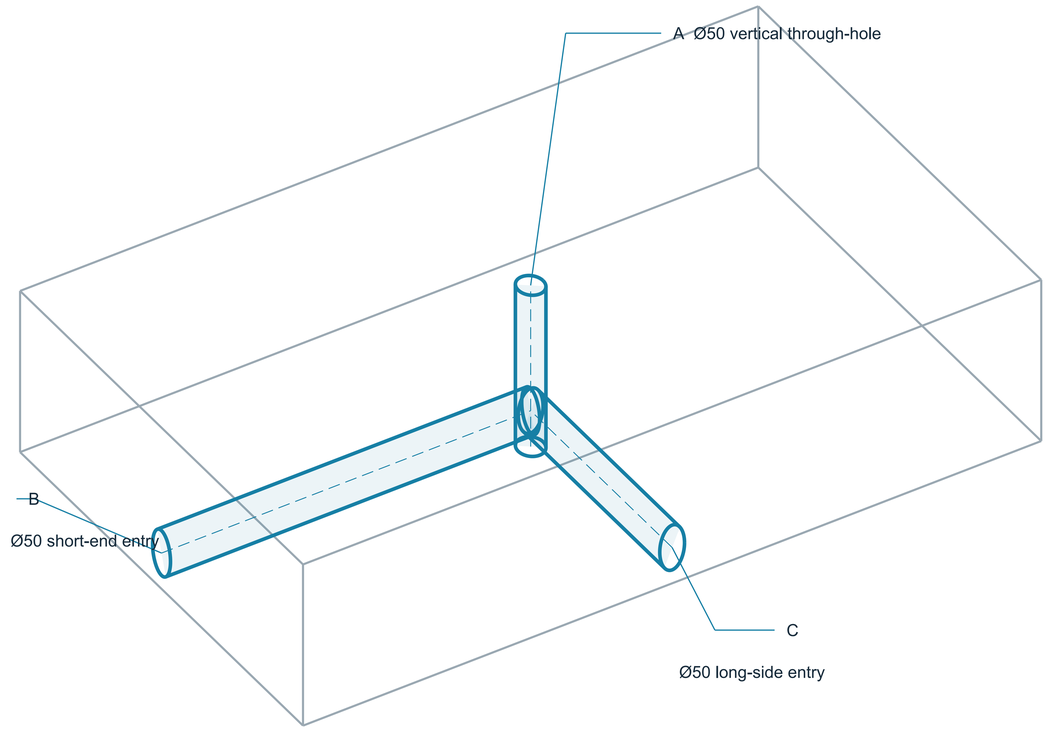

CABLE ROUTE

B: Short-end channel runs to the central junction.

C: Long-side channel runs to the same junction.

A: Vertical channel continues through the block.

Both horizontal channel axes: 40 above underside.

M plastic plug installed at the long-side opening.

Overall: 1490 x 790 x 180 mm | All channels: Ø50 mm | Side-hole centre height: 40 mm

Centred hole positions and short-end diameter follow the supplied channel layout. Plug fit / tolerances unspecified.