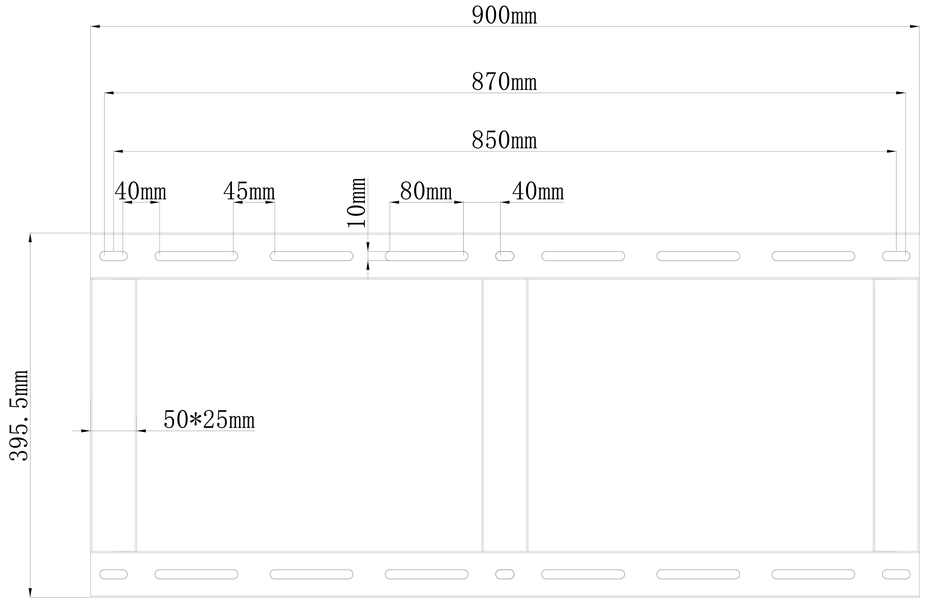
900mm
870mm
850mm
40mm
45mm
10mm
80mm
40mm
395.5mm
50*25mm

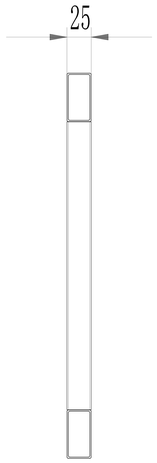
25

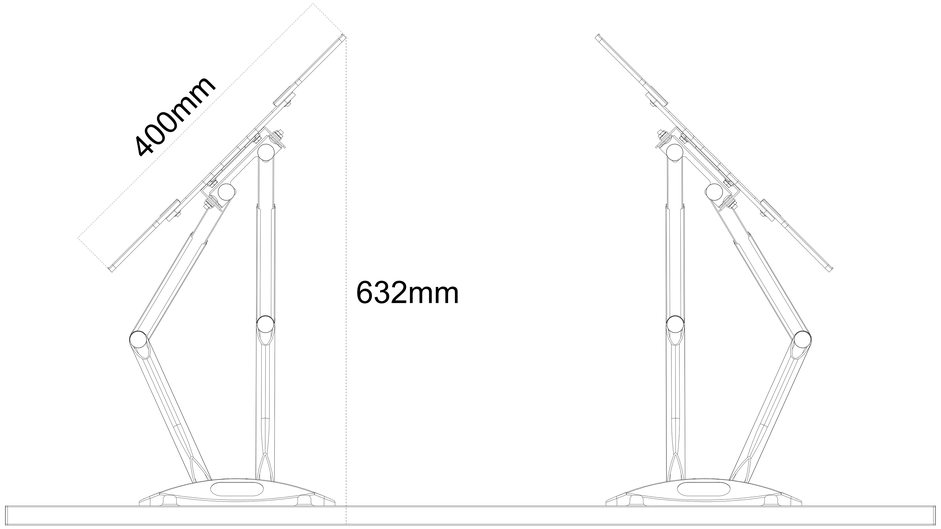
400mm
632mm

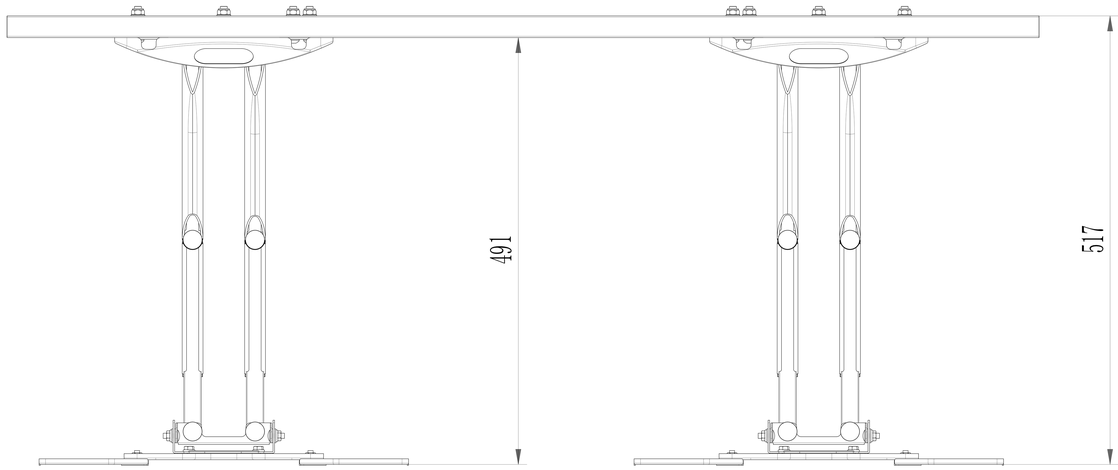
491
517

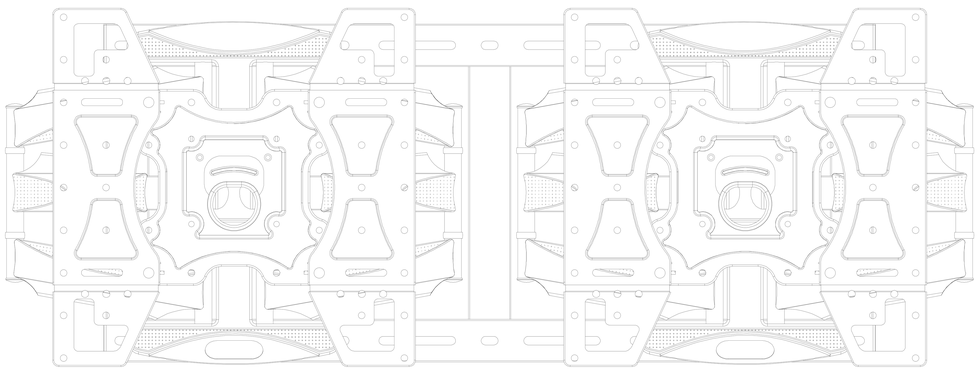

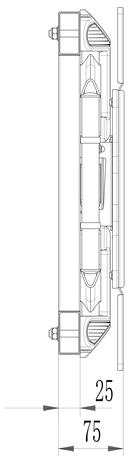
25
75

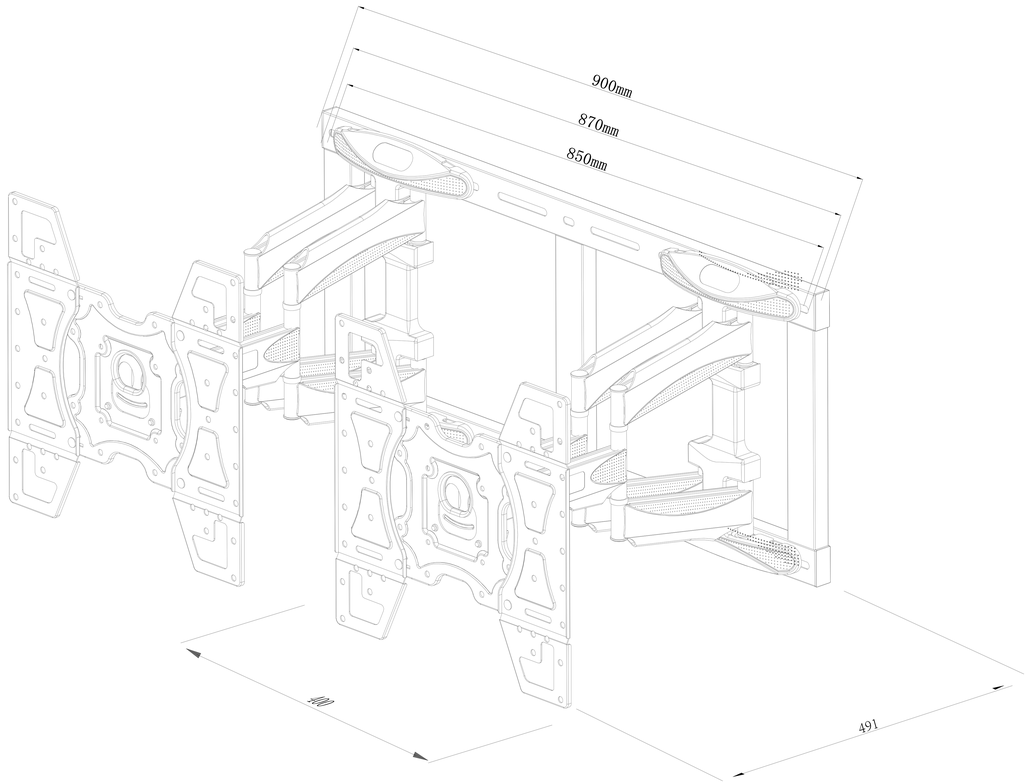
900mm
870mm
850mm
491